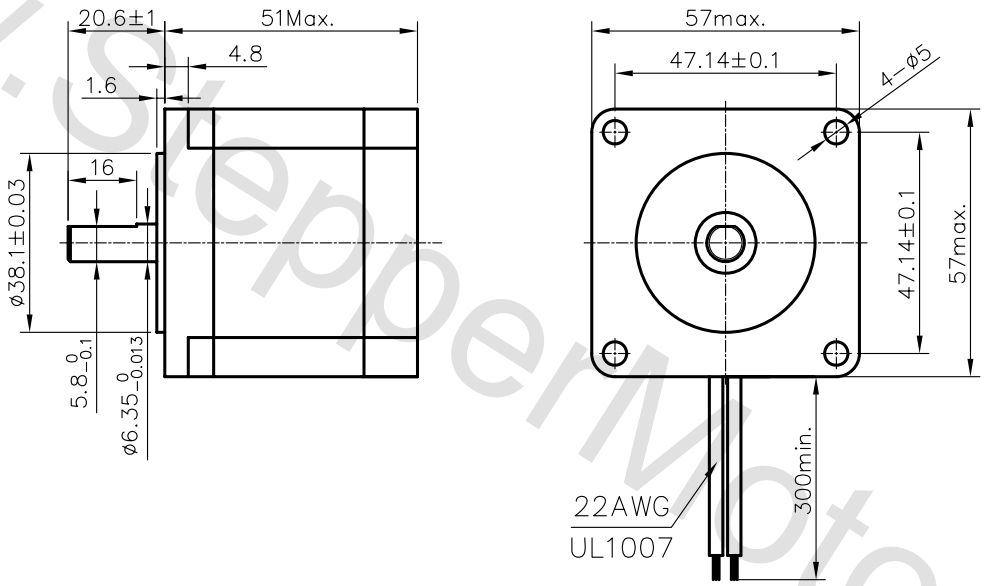

Wiring Diagram:

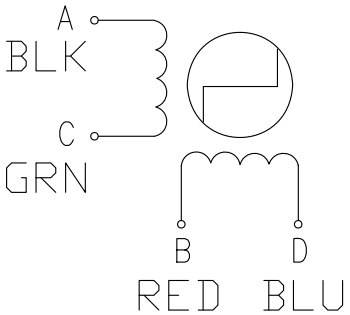

Specifications:

Phase	2		COMMENT
Step Angle	1.8	deg.	
Voltage	2.3	V	
Current	2.8	A	
Resistence	0.83±10	Ω	
Inductance	2.2±20	mH	
Holding Torque	10.1	kg.cm	
Insulation Class	B		
Mass	0.59	kg	

160309

57HS51-2804-13F

www.StepperMotorCanada.ca